Couchbase Eventing Overview

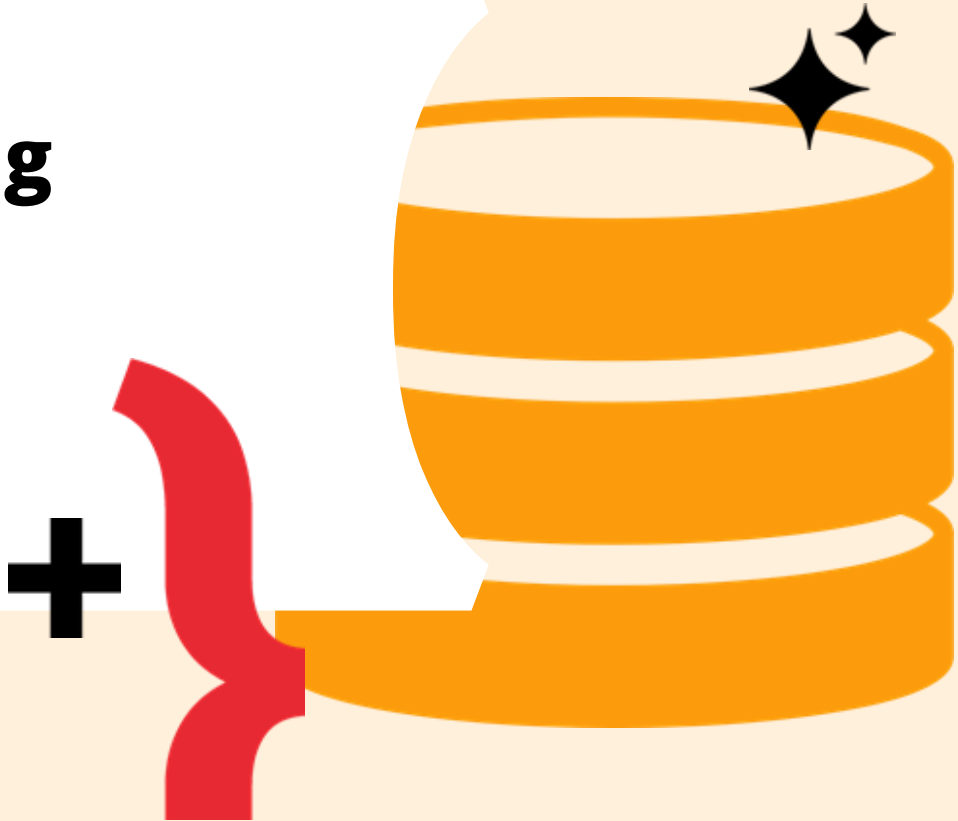

Confidential and Proprietary. Do not distribute without Couchbase consent. © Couchbase 2026. All rights reserved.

Eventing Service

Events are document mutations on a Data node, captured via DCP (Database Change Protocol).

- Create
- Update
- Upsert
- Delete
- Expiry via TTL settings

A service that allows you to do "MORE" with a Change

- Centralized user-defined business logic collocated with a customer's core data service thus allowing actions to be taken in real-time in response to changes in their data
- Leveraging familiar JavaScript, Eventing makes it easy for developers to build and maintain data-driven business logic close to the data.
- Easily resize cluster(s) as usage grows by leveraging MDS to scale on demand without concern for the underlying infrastructure

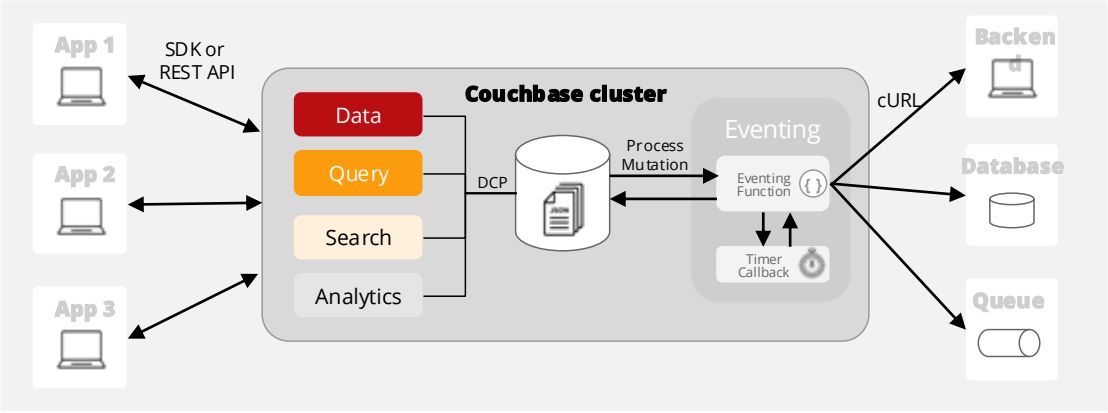

Confidential and Proprietary. Do not distribute without Couchbase consent. © Couchbase 2026. All rights reserved.

Eventing: A service that allows you to do “MORE” with a Change

- Real-Time Server-Side Event Processing
- Easy to Develop, Deploy & Maintain
- Highly Available, Performant & Scalable
- Bring Data-Driven Business Logic Closer to Data
- Triggered when Data Changes or Mutates
- Native Integrations:
  - Data Service (KV) Integration
  - SQL++ Integration
  - cURL Integration
  - Function Application Logging
- Enrich or Alter Content in Near Real-Time
- Trigger Routines at Specified Intervals
- Propagate Changes to Other Systems

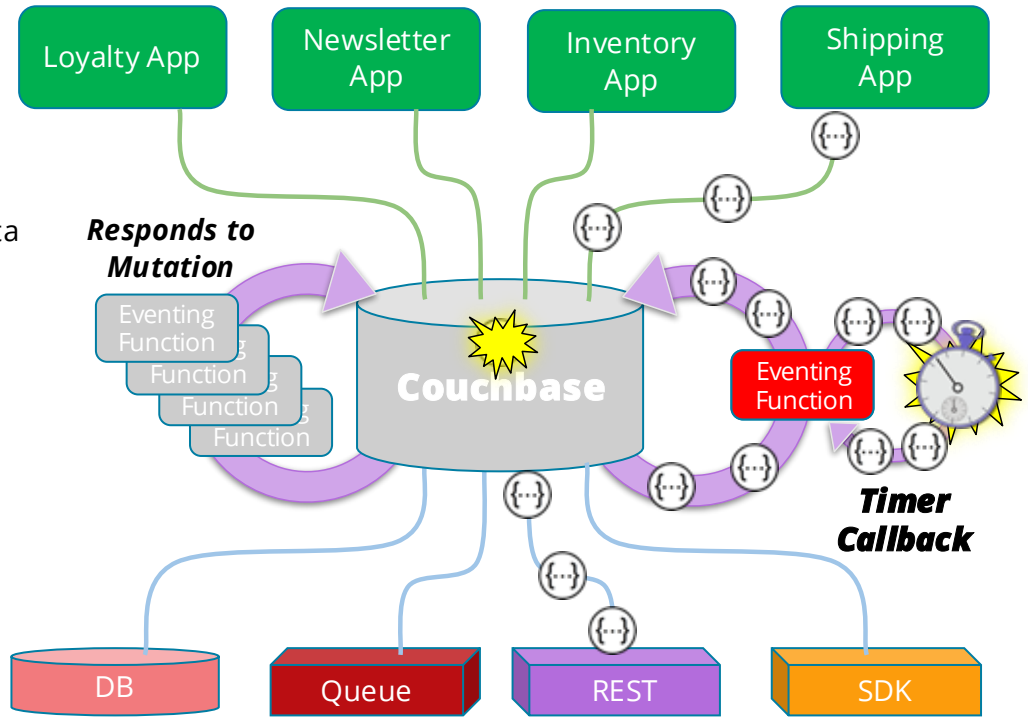

Confidential and Proprietary. Do not distribute without Couchbase consent. © Couchbase 2026. All rights reserved.

Eventing: Application Agility & Flexibility

- Real-time actions
- Centralized Business Logic
- Data validation
- Document enrichment
- Document Transformation
- Data Service Integration
- N1QL (SQL+) Integration
- Timers for deferred/recurring actions
- External Integration via cURL
- Logging

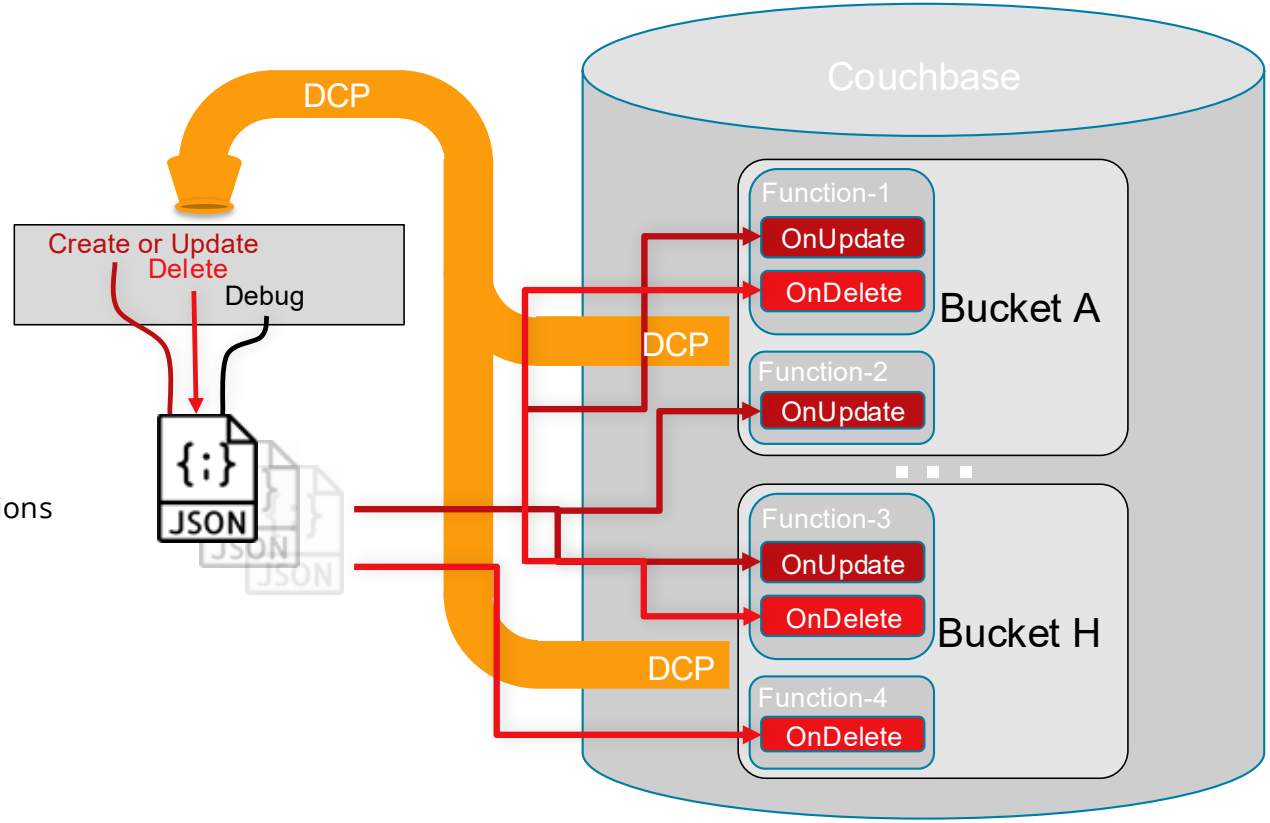

Confidential and Proprietary. Do not distribute without Couchbase consent. © Couchbase 2026. All rights reserved.

Thank You

Couchbase